FILE NO	Teddington 04	DRAWING NO	050524004	REV	A

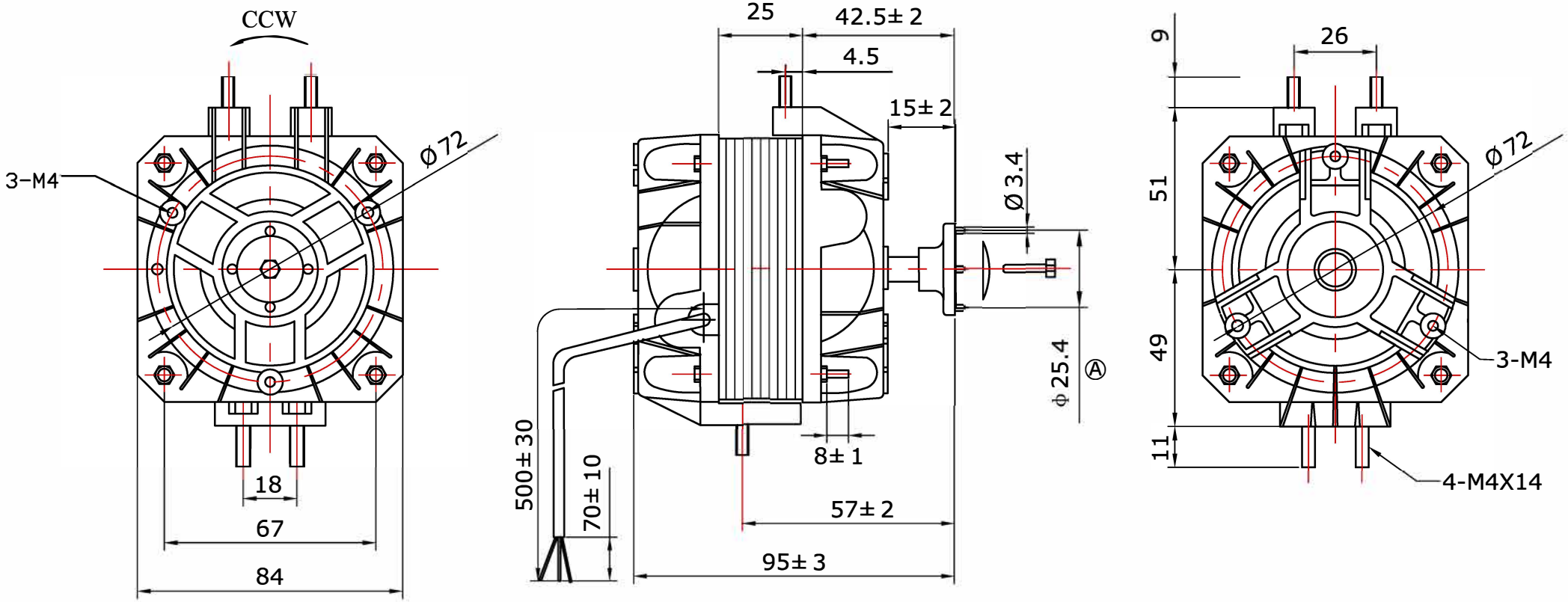

TF M16W230V 16/70W IP42
220/240V~ 50/60Hz
CL. H 1300/1550RPM
Teddington Tel +33(0)141477171 www.teddington.fr

SPECIFICATION	
MOTOR	Shaded pole motor
MOTOR TYPE	
VOLTAGE/FREQUENCY	230V 50Hz
INPUT POWER	70W
CURRENT	0.45A
SPEED	1300RPM on fan blade Φ250 / 28°
ROTATION	CCW (looking towards the shaft)
AIRFLOW DIRECTION	SUCKING

MOTOR PROTECTION	Thermal protected
INSULATION CLASS	H
PROTECTION CLASS	IP 42
BEARINGS	Sleeve bearings
LUBRICATING OIL	PERMAWICK 284#
ELECTRICAL CONNECTION	VDE 3× 0.5mm² lead wire 470-530mm free length
BRACKET	/
FAN BLADES	Φ250 / 28°

REV.	DESCRIPTION	APPROVED	DATE
A	Ø25.4 Ø25		

DECIMAL	TOLERANCE		SIGN	DATE
X	±0.5	DRN.BY	NOKEYLEE	2005.9.2
X.X	±0.25	CHD.BY	ANSON	2005.9.2
X.XX	±0.15	ENG.BY		
ANGLE	±3°	APP.BY		

TITLE
FAN MOTOR 16W

PROJECTION

A4
SCALE:
SHEET: 4 of